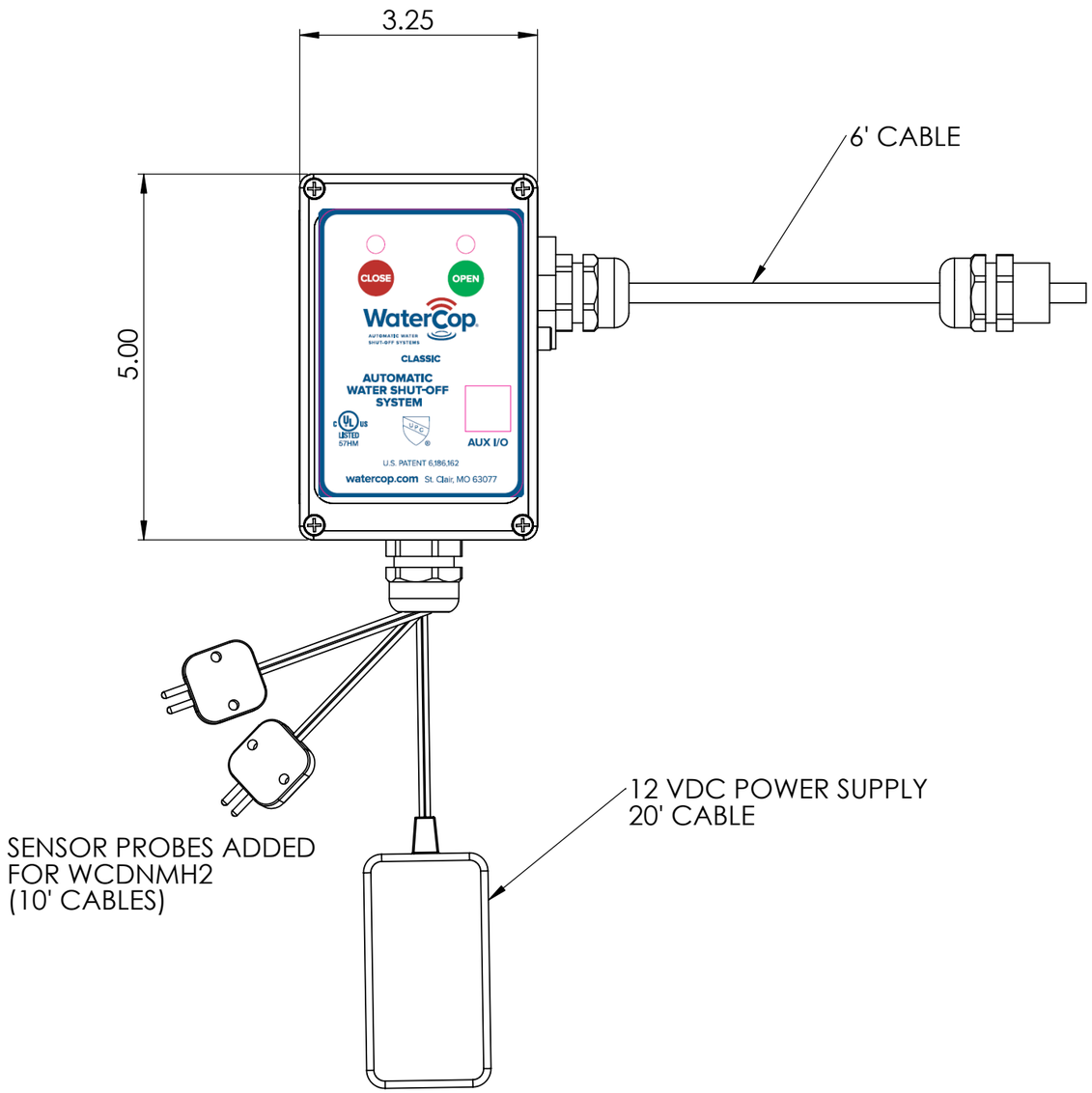

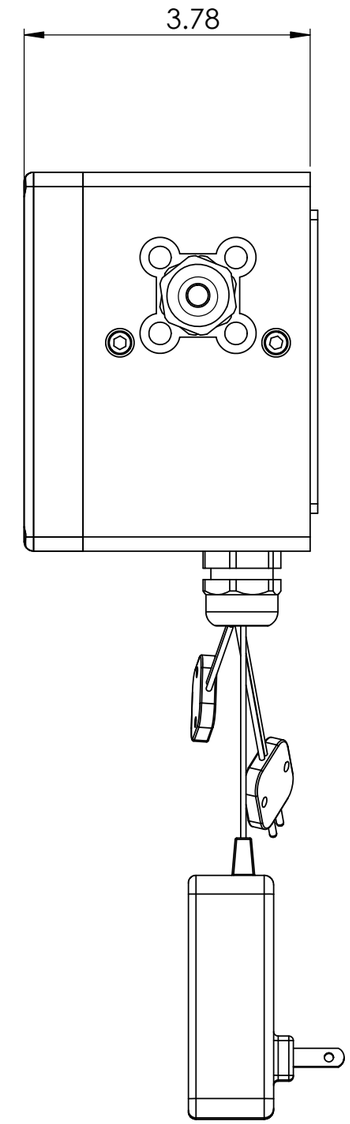

UNCONTROLLED DRAWING

THIS PRINT IS THE PROPERTY OF DYNAQUIP CONTROLS AND SHALL NOT BE COPIED, REPRODUCED,LOANED, OR DISPOSED OF DIRECTLY OR INDIRECTLY, NOR USED FOR ANY PURPOSE OTHER THAN THAT FOR WHICH IT IS SPECIFICALLY FURNISHED EXCEPT BY WRITTEN PERMISSION OF DYNAQUIP CONTROLS.

NO.	WCDNM	FILE NO. SUB390
TITLE	WATERCOP NON MOTORIZED CONTROL UNIT	

DR	DATE	CH'KD	DATE	ENGR	DATE
MJP	07-03-25				

DynaQuip®

CONTROLS CORPORATION